C44UVGT6350T31K

C44U-T, Film, Metallized Polypropylene, DC Link, 350 uF, 10%, 1800 VDC

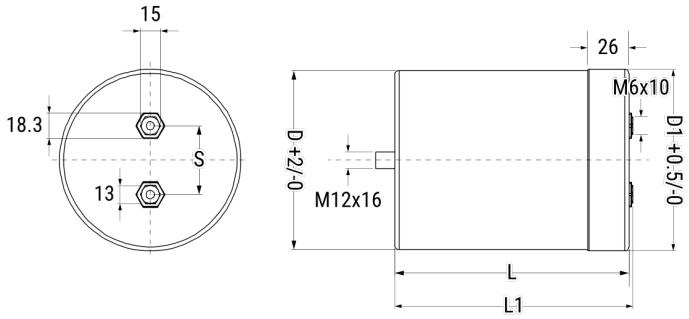

Click here for the 3D model.

Dimensions	
D	136mm +2mm
L	131mm +/-2mm
L1	134mm +/-2mm
S	50mm +/-0.3mm
D1	139mm +0.5mm

Packaging Specifications	
Mounting	Through-Hole
Terminal Type	Bolt - M12x16
Packaging	Bulk, Bag
Packaging Quantity	4

General Information	
Series	C44U-T
Dielectric	Metallized Polypropylene
Style	Can
Features	DC Filtering, Energy Storage
RoHS	With Exemptions
Lead	Screw Terminals M6
AEC-Q200	No
Typical Component Weight	2000 g
Miscellaneous	Thermal Resistance = 4.8C/W.

Specifications	
Capacitance	350 uF
Capacitance Tolerance	10%
Voltage DC	1800 VDC
Temperature Range	-40/+85°C
Rated Temperature	85°C
Insulation Resistance	1.35 GOhms
Max dV/dt	10 V/us
ESR	1.35 mOhms
Ripple Current	60 Amps (1kHz 55C), 3500 Amps (Peak)
Inductance	40 nH

Statements of suitability for certain applications are based on our knowledge of typical operating conditions for such applications, but are not intended to constitute - and we specifically disclaim - any warranty concerning suitability for a specific customer application or use. This Information is intended for use only by customers who have the requisite experience and capability to determine the correct products for their application. Any technical advice inferred from this Information or otherwise provided by us with reference to the use of our products is given gratis, and we assume no obligation or liability for the advice given or results obtained.

© 2006 - 2024 KEMET