USEQFCEA391100

Obsolete

KEMET, QFCE, Flame Detection, TO39, Infrared, Small SMD Package, 12C Communication Compatible

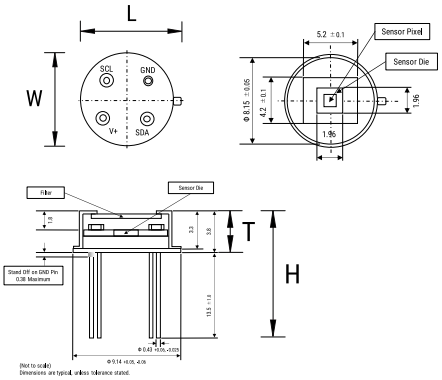

Click here for the 3D model.

General Information	
Series	QFCE
Type	Flame Detection
Style	TO39
Description	Analog output flame sensor
Features	Small SMD Package, 12C Communication Compatible
RoHS	With Exemptions
REACH	SVHC (PZT – CAS 12626-81-2)
Qualifications	REACH

Dimensions	
L	9.14mm +0.05/-0.06mm
W	9.14mm +0.05/-0.06mm
H	17.3mm +/-1mm
T	3.8mm NOM

Packaging Specifications	
Packaging	Bulk
Packaging Quantity	50
Typical Component Weight	950 mg

Specifications	
Temperature Range	-40/+85°C
Power Supply Voltage	1.7 - 3.6 V
Current	1 - 23 uA (Supply Current, Typical)
Field of View	100 degrees

Statements of suitability for certain applications are based on our knowledge of typical operating conditions for such applications, but are not intended to constitute - and we specifically disclaim - any warranty concerning suitability for a specific customer application or use. This Information is intended for use only by customers who have the requisite experience and capability to determine the correct products for their application. Any technical advice inferred from this Information or otherwise provided by us with reference to the use of our products is given gratis, and we assume no obligation or liability for the advice given or results obtained.

© 2006 - 2026 YAGEO