C2220H123JDGACTU

Aliases (C2220H123JDGAC7800)

SMD Indust C0G HVHT200C, Ceramic, 0.012 uF, 5%, 1,000 VDC, C0G, SMD, MLCC, High Temperature, Ultra-Stable, Low Loss, 3.5 mm, 2220 / 5651

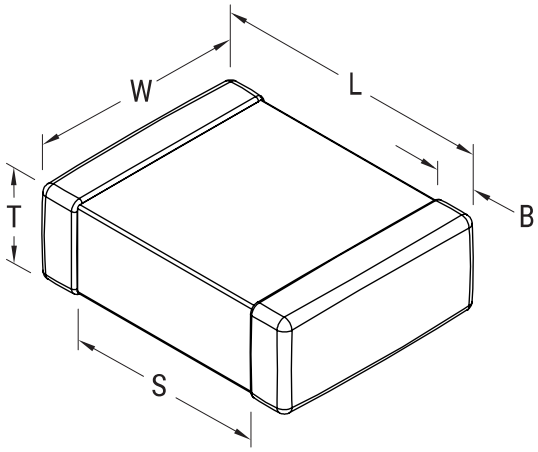

Click here for the 3D model.

General Information	
Series	SMD Indust C0G HVHT200C
Style	SMD Chip
Description	SMD, MLCC, High Temperature, Ultra-Stable, Low Loss
Features	High Temp, Ultra-Stable, Low Loss
RoHS	Yes
Termination	Tin
Marking	No
AEC-Q200	No
Typical Component Weight	320 mg
Shelf Life	78 Weeks
MSL	1

Dimensions	
L	5.7mm +/-0.4mm
W	5mm +/-0.4mm
T	2.5mm +/-0.20mm
S	3.5mm MIN
B	0.6mm +/-0.35mm
Case Code (EIA / mm)	2220 / 5651

Packaging Specifications	
Packaging	T&R, 180mm, Plastic Tape
Packaging Quantity	500

Specifications	
Capacitance	0.012 uF
Measurement Condition	1 kHz 1.0Vrms
Tolerance	5%
Voltage DC	1000 VDC
Dielectric Withstanding Voltage	1,200 VDC
Temperature Range	-55/+200°C
Temp. Coefficient	C0G
Capacitance Change with Reference to +25°C and 0 VDC Applied (TCC)	30 ppm/C, 1kHz 1.0Vrms
Dissipation Factor	0.1% 1 kHz 1.0Vrms
Aging Rate	0% Loss/Decade Hour
Insulation Resistance	83.3333 GOhms

Statements of suitability for certain applications are based on our knowledge of typical operating conditions for such applications, but are not intended to constitute - and we specifically disclaim - any warranty concerning suitability for a specific customer application or use. This Information is intended for use only by customers who have the requisite experience and capability to determine the correct products for their application. Any technical advice inferred from this Information or otherwise provided by us with reference to the use of our products is given gratis, and we assume no obligation or liability for the advice given or results obtained.

© 2006 - 2026 YAGEO